TORNOS

THINK PARTS **THINK TORNOS**

MULTISIGMA 8x28

Multispindle automatic lathe with parallel numerical control.

MULTISIGMA

With 8 spindles and up to 2 counter-spindles, MultiSigma offers a powerful and flexible machining solution at a very competitive price.

Simplicity et flexibility

- Easy programming thanks to TB-DECO Software
- Twin and independent back operations*
- 1 numeric manipulator*
- Integral palletization*
- Great chip evacuation thanks to a shorter slide*
- Chucker*

Performance

- 8 motorized spindles running at independent speeds
- High precision
- PC control*
- 2x4*

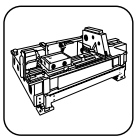

Rigidity

- Construction as verified by quality of finite elements
- High output

* Optional.

Machining example MultiSigma 8x28

Material: Al Eco62Sn 9 Ø 22 mm
Production: 11.63 sec./parts

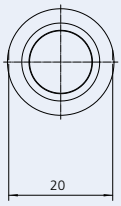

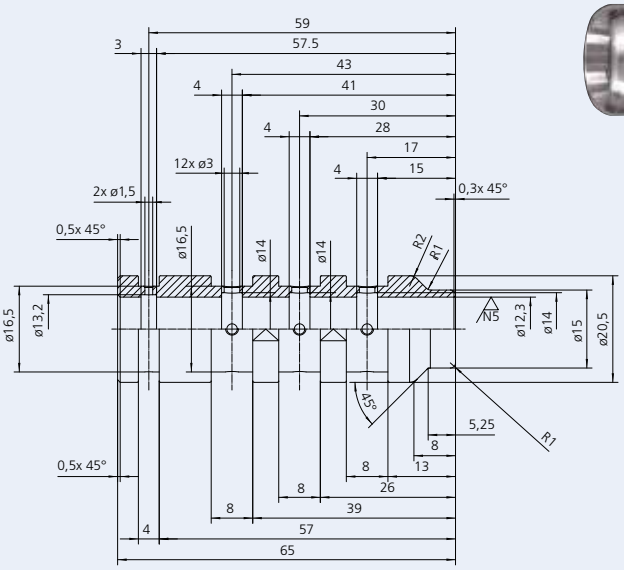

- Rough ID grooves by milling with a rotating Y axis end working unit
- Burnish face in counter operations.

PRESENTATION

With the new MultiSigma 8x28 Tornos offers a complete and unique solution to produce complex parts in one set up.
Eight powerful and independent spindles allow the highest degree of flexibility whilst an integrated robot allows the unloading of parts into a pallet. TB-DECO programming software offers great comfort in programming.
Combined with a vast array of options such as up to eight independent frontal units, y-axis, multiple tool holder, PC control and remote diagnostics, the MultiSigma 8x28 is the machine of choice for highly demanding parts.
The legendary high precision, large working area provides accessibility and the bar loader and chip management system allow an overall, complete and high performing solution – all in one machine.

8 MOTORIZED SPINDLES RUNNING AT INDEPENDENT SPEEDS

Advantage: Ideal cutting speed at all times!

The new MultiSigma is supplied with the latest generation motorized spindles and is the most powerful machine in its category.
The MultiSigma 8x28 is equipped with motorized spindle technology, the success of which has already been extensively proven with the MultiAlpha line.

Advantages

- Ideal cutting speed on each position.
- Stopping and positionning on each spindle.
- Maximum exploitation of new cutting tool technologies.
- Exceptional flexibility.
- Uncompromised productivity.

Each position allows a controlled stop, meaning that all types of operation, such as milling or positioned cross drilling can be carried out at all times, with all spindles. The spindles can all be synchronised at an angle, meaning that positioned operations can be executed on several stations (for example, transversal drilling on one station and tapping on another).
This means that customers have a choice of using a machine that actually best meets their requirements. Where a company has a machine fleet, this would mean that it could deploy additional multispindle machines operating according to the same concept. The overriding aim is to use the most efficient machine in terms of cost and productivity, based on the parts being manufactured.

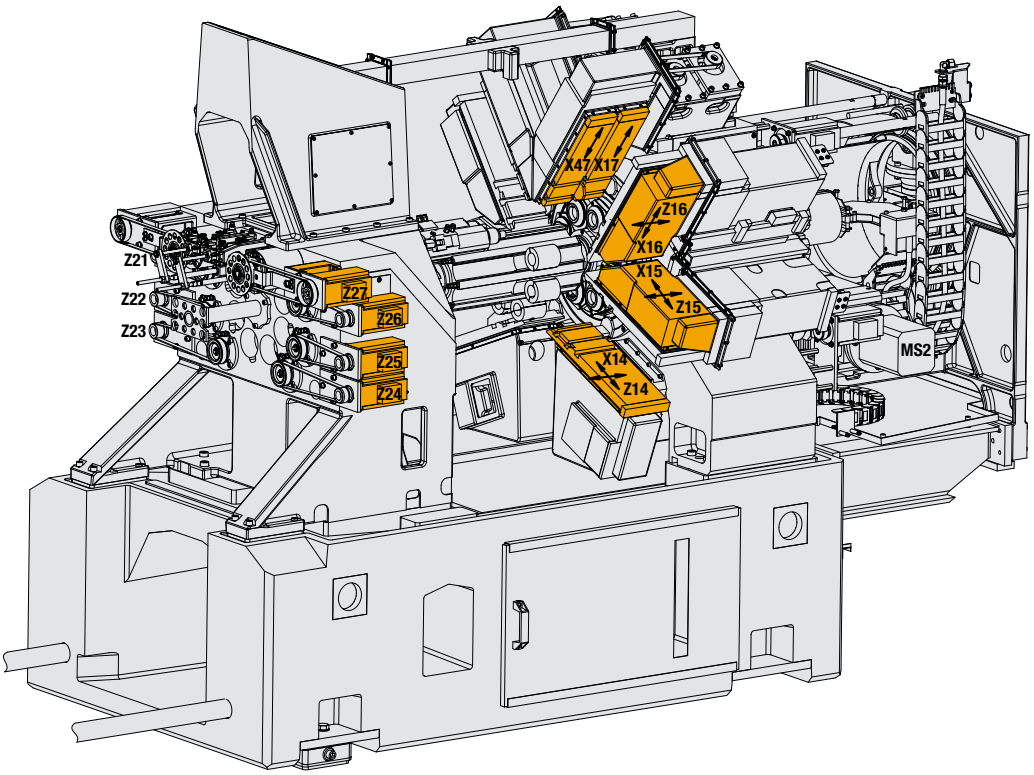

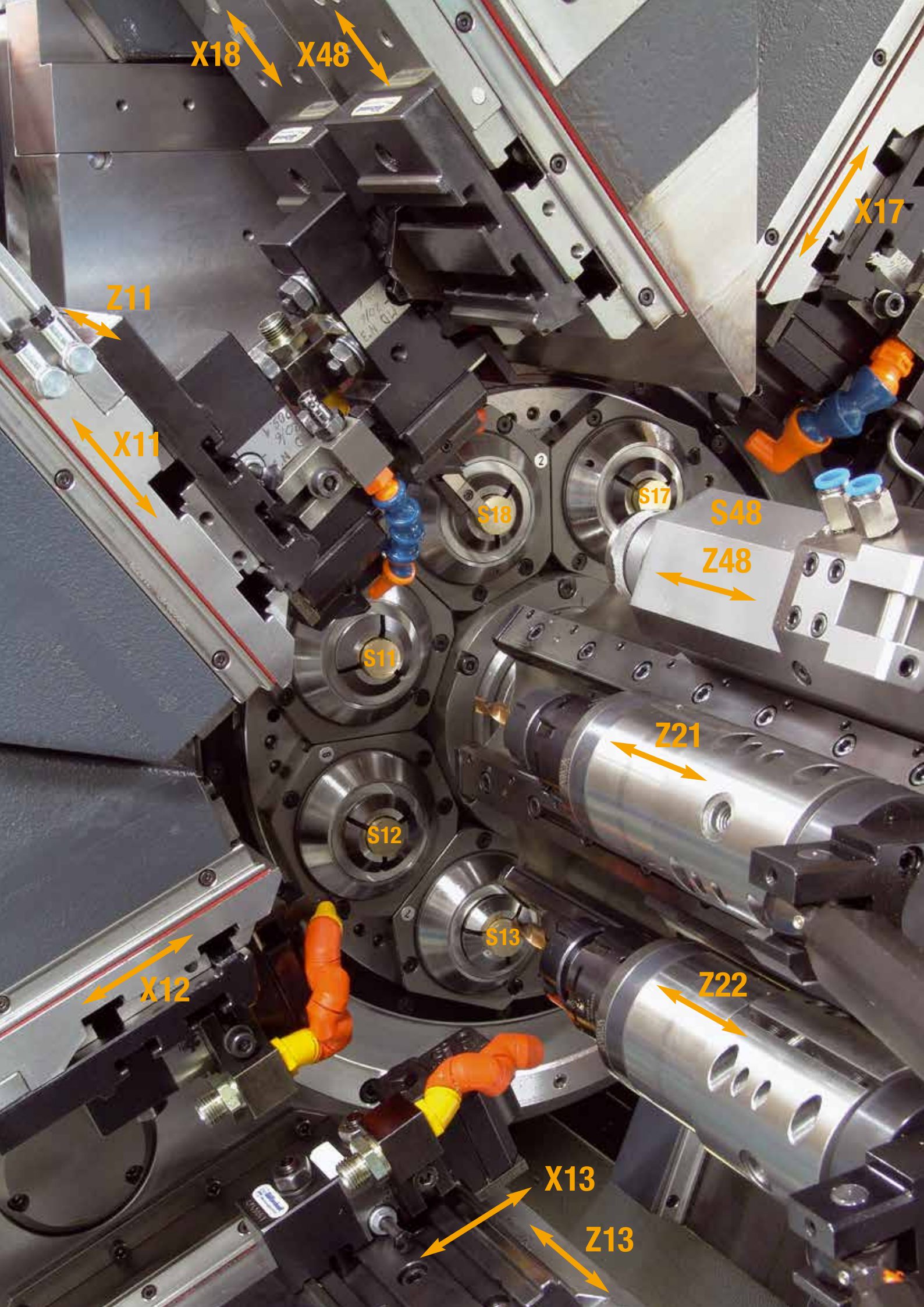
X18
X48
X17
Z11
X11
S18
S17
S48
Z48
S11
Z21
S12
S13
X12
Z22
X13
Z13

DOUBLE BACK WORKING OPERATION AND DOUBLE CYCLE (2x4)

Advantage: To complete a back working operation rapidly

Depending on the operation required on the rear face of the part, the machine can be equipped with two machining stations for rear counter operations with multiple tooling.

Advantages:

- Splitting the time for back working to reducing cycle time.

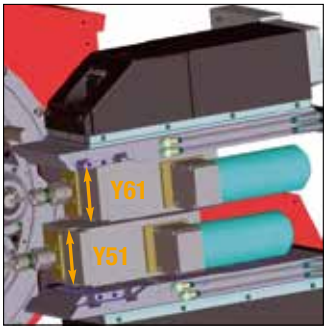

8 FRONTAL SPINDLES AND MANY MORE FEATURES

Advantage: Complex parts can be produced

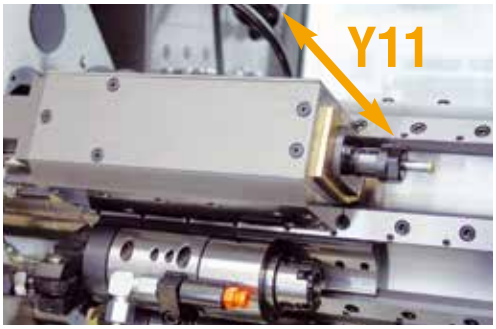

The well proven concept with central block allows the user to mount up to seven independent motor driven frontal spindles, fixed or driven by independent motors. The Y-axis enhances further the possibility for thread milling and grooving from the front side.
Many new features are available for mounting on the cross slides. The cross slide is used for off-center holes and for milling faces.
A multiple tool holder (turret) with 4 tools allows the user to perform four different operations or use sister tools for greater autonomy – all on one station. To increase performance and comfort, a PC control is available to program directly on the machine with all service instructions and videos available. Remote diagnostics are available to use with your internal network or connect to the Tornos service centre.
Applying the world-known know-how from our single spindle machine division for medical part production, the thread whirling technology has also be developed for the Tornos Multispindle machines.

New additional features

- Up to 7 frontal units (fix or with independent, free programmable spindle speed).
- Y-axis for frontal operation (fix or rotating).
- Y-axis for cross slides.
- Multiple tool holder (4 tools).
- PC Control with remote access.
- Internal and external thread-whirling.
- Milling heads and HF drilling attachements.
- Option shortened central slide. (This possibility allows the mounting of the two thread whirling devices and guarantees better chip evacuation.)
- Option 2x4: double productivity with twice as many cycles.

CONTROLLED AND PROGRAMMABLE PART UNLOADING

Advantage: Controlled part unloading

Precision and the visual appearance of the parts being manufactured in today's market are becoming more and more stringent. Dents, marks and flaws are no longer permitted.
In order to meet these requirements, Tornos developed a dual parts handling system, which picks up the parts and conveys them directly to the machining area and then conveys them outside of the machining area.

Advantages

- All parts are handled with care.
- No more flaws caused by impact.
- Facility of transferring the parts to another machine.

The system can be adapted and used for various applications, such as:

- Removing the part away from the machining area to a pre-cleaning station.

INTEGRATED PALLETIZATION

Advantage: Easy to incorporate in a complete industrial process!

Many leading companies automated their processes to a maximum because of labour costs and the demand for very high quality output. The MultiAlpha was developed by incorporating a palletization system. Very often, commercial palletization systems are limited at machine interface level and therefore have to be assembled to the side of the machine, which takes up a lot of space. To overcome this problem, Tornos located the integral palletization system between the machine and control cabinet thereby optimising integration and saving on space. Large pallets of 400 x 600 mm were incorporated as standard to enhance autonomous operation.

Advantages

- Integrated palletization in the machine.
- Reduced surface area.

The general idea of palletization

Once the parts are loaded onto pallets, they can pass directly to a washing system.

MULTISIGMA 8x28

Key benefits

- 8 motorspindles with independent spindle speeds.
- Controlled and programmable part unloading.
- Single cycle 1x8 or double cycle 2x4.
- Integrated palletizing.

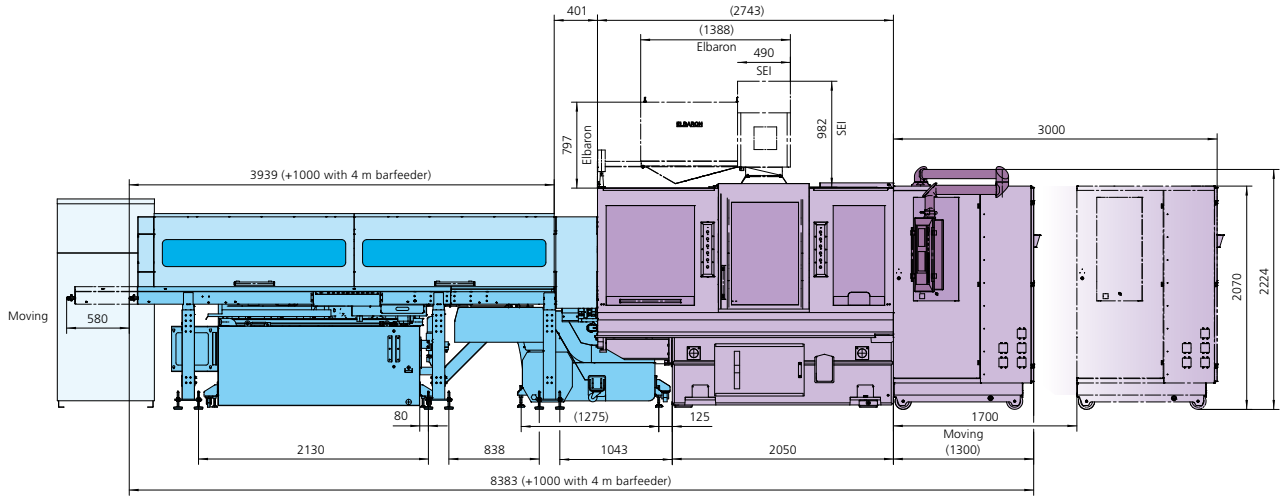

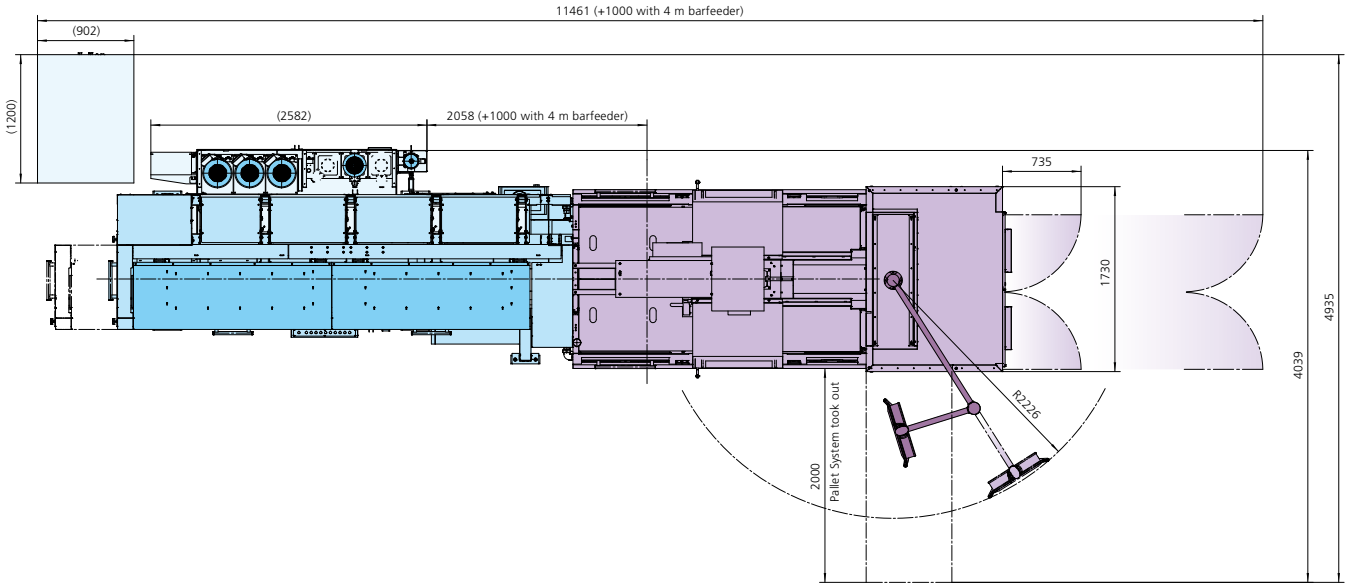

TECHNICAL SPECIFICATIONS

Weight (with oil)	kg	~ 10,000
Cutting oil tank capacity	l	up to 2,000
Installed power	kVA	87
Pneumatic group pressure	bars	6

TECHNICAL CHARACTERISTICS

TECHNICAL CHARACTERISTICS		
Bar capacity (with machining preparation)	mm	28 (26)
Max. length of part	mm	90 (140)

Max. speed of motorized spindles	rpm	8’000
Motorized spindle power	kW	11.6 (15.4)
Motorized spindle torque	Nm	16 (20.2)

Max. counter-spindle speed	rpm	8’000
Motor counter-spindle power	kW	5.3 (7.5)
Counter-spindle motor torque	Nm	7 (9.2)

Max. drilling spindle speed	rpm	8’000
Drilling spindle power	kW	5.3 (7.5)
Drilling spindle torque	Nm	7 (9.2)

Max. “High Power” drilling spindle speed	rpm	8’000
“High Power” Drilling spindle power	kW	10.6 (15)
“High Power” Drilling spindle torque	Nm	14 (18.4)

Number of linear axes		24 (28)
Number of rotary axes		9 (13)
Travel of crossing slide in X1	mm	50
Travel of crossing slide in Z1	mm	80
Travel of end unit in Z2	mm	200
Cutting slide travel (X17, X18)	mm	75
Counter-spindle travel in Z (Z47, Z48)	mm	330
Back-operation tool support travel (X47, X48)	mm	75
No. of tools for back-operation		2 (4) tools
Spindle cooling		Oil
Numeric control		Fanuc 30ib
Programming system		TB-DECO

TORNOS SA
Rue Industrielle 111
CH - 2740 Moutier
T +41 (0)32 494 44 44
F +41 (0)32 494 49 03
contact@tornos.com
www.tornos.com

TORNOS TECHNOLOGIES DEUTSCHLAND GmbH
Karlsruher Str. 38
D - 75179 Pforzheim
T +49 (0)7231 / 910 70
F +49 (0)7231 / 910 750
contact-ttd@tornos.com

TORNOS TECHNOLOGIES FRANCE
Boîte postale 330
St-Pierre en Faucigny
F - 74807 La Roche
s / Foron Cedex
T +33 (0)4 50 038 333
F +33 (0)4 50 038 907
france.contact@tornos.com

TORNOS TECHNOLOGIES IBÉRICA
Pol. Ind. El Congost
Avda. St Julià, 206 Nave 8
E - 08403 Granollers
T +34 93 846 59 43
F +34 93 849 66 00
comercial.tti@tornos.com

TORNOS TECHNOLOGIES ITALIA SRL
Via Cesare Pavese 21
I - 20090 Opera / MI
T +39 02 57 68 15 01
F +39 02 57 68 15 230
italia.contact@tornos.com

TORNOS TECHNOLOGIES US CORPORATION
840 Parkview Boulevard
US - Lombard, IL 60148
T +1 630 812 2040
F +1 630 812 2039
info-us@tornos.com
www.tornos.us

TORNOS TECHNOLOGIES UK LTD
Tornos House
Whitwick Business Park
Coalville
UK - Leicestershire LE67 4JQ
T +44 (0) 1530 513100
F +44 (0) 1530 814212
sales@tornos.co.uk

TORNOS TECHNOLOGIES POLAND Sp. z o.o.
Ul. Spółdzielcza 37-39
55-080 Kąty Wrocławskie
Poland
T +48 71 33 85 618
F +48 71 33 85 617
poland.contact@tornos.com

TORNOS TECHNOLOGIES (Shanghai) LTD
Hui Feng Creativity Garden
Feng Yu Building, 1-2F
No. 239, Xitai Rd, Xu Hui District
CN - Shanghai 200232
T +86 21 6235 1235
F +86 21 6235 1938
china.contact@tornos.com

TORNOS DONGGUAN OFFICE
SE1-29, Changrong International
Machinery Hardware Square, No.56
Middle ZhenAn Road, Wusha,
ChangAn Town, Dongguan City,
Guandong Province, 523859
T +86-769-8533 7266
F +86-769-8533 7265
china.contact@tornos.com

TORNOS BEIJING OFFICE
Rm.1706, Tower A
Dongyu Office Building
Jia #1 Shuguang Xili
Chaoyang District
CN - Beijing 100028
T +86 10 5979 8583
F +86 10 5822 0483
beijing.contact@tornos.com

TORNOS SA THAILAND REPRESENTATIVE OFFICE
7th Floor, 19, Bangna -Trad Soi 34,
Bangna -Trad KM. 3 Road.
Bangna, Bangkok, 10260
Thailand
T +66 2746 8840-1
F +66 2746 8842
thailand.contact@tornos.com

TORNOS TECHNOLOGIES ASIA LTD MALAYSIA REPRESENTATIVE OFFICE
No. 1-1-11, Ground Floor & 1-2-11,
First Floor, One Terrace Plus,
Tingkat Mahsuri 4, 11900 Bayan Lepas,
PENANG, MALAYSIA
T +60 4 642 6562 / 4 642 6563
F +60 4 642 6561
malaysia.contact@tornos.com

Edition December 2015 – © Tornos 2015, all rights reserved cm